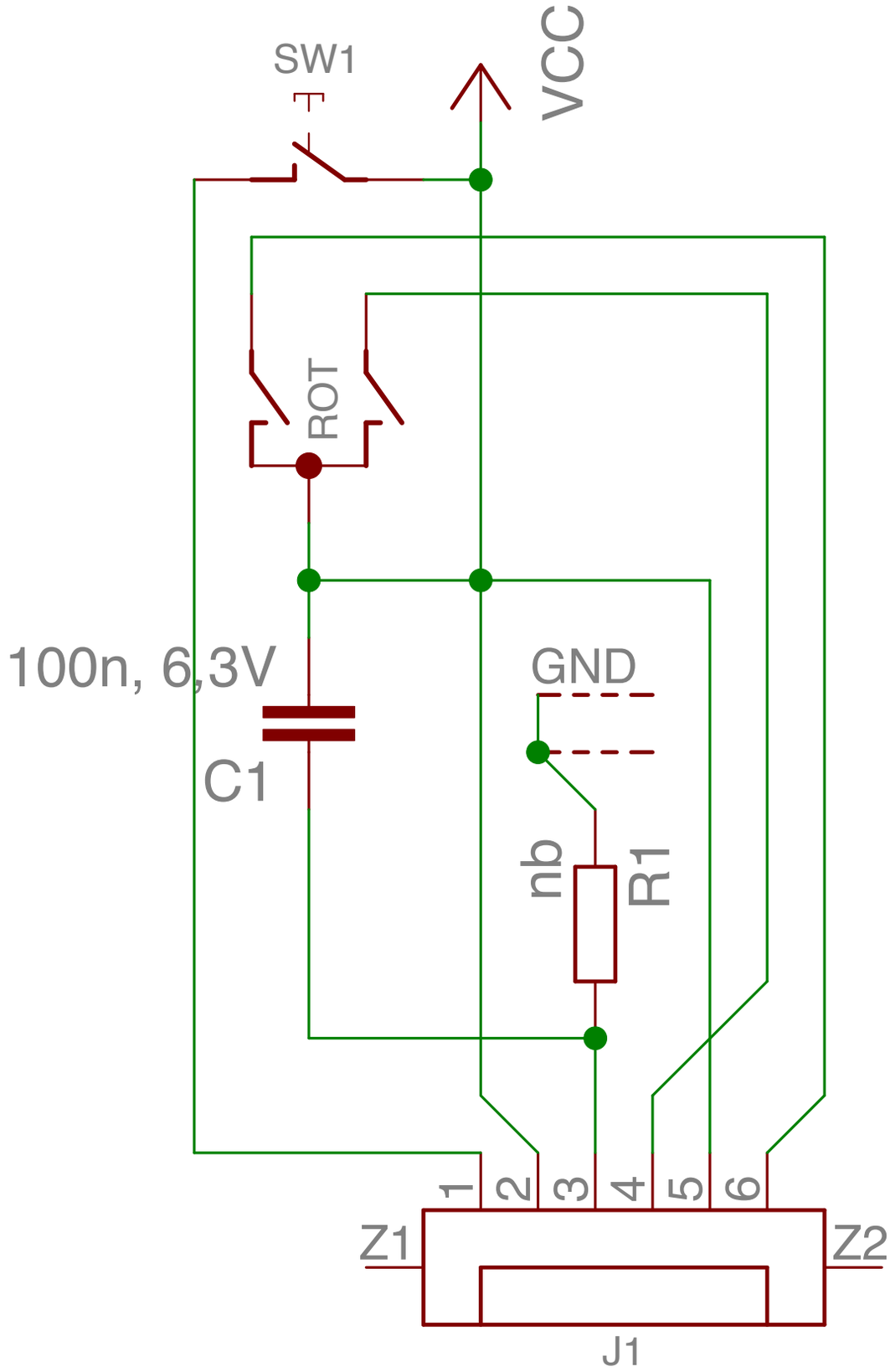

WINZKI GmbH & Co. KG
https://www.hoerbert.com
BY NC SA